smart line.



BOXER®

BOXER

smart line.

Il pavimento SPC è una scelta ecologica: composto da materiali sostenibili e 100% riciclabile, garantisce un basso impatto ambientale e sostiene il rispetto per l'ambiente

FORMATI:



18x122 23x153 31x92

indice.

smart wood. pag. 12

jumbo wood. pag. 24

smart tile. pag. 30

trim tiles pag. 36

specifiche tecniche pag. 38

smart line.

BOXER®



SPC

Solido, pratico e impermeabile, il pavimento in SPC è ideale per ogni ambiente grazie alla sua resistenza a graffi, acqua e usura.

Facile da installare.
Bello da vedere.
Semplice da pulire.

Se hai letto anche questo,
allora sei proprio interessato!

Andiamo avanti a sfogliare!

Facile da pulire

Basta la pulizia con detergenti neutri





Solido e tosto

Elevata resistenza agli urti, ai graffi e al traffico intenso

Facile da montare

Montaggio senza colla,
subito pronto all'uso!





Silenzio grazie!

Un ottimo isolamento acustico! Riduce rumori e fastidi al calpestio

SPC

DI COSA SI TRATTA?

Quante volte avreste desiderato per casa vostra un pavimento in vero legno, caldo, isolante e mai uguale, ma alla fine avete desistito a causa dei costi del materiale, dei costi di posa, dei problemi con l'acqua, degli eccessivi assestamenti, della periodica levigatura ecc.?

Problema risolto!

Natura e tecnologia oggi ci vengono incontro riunite nei pavimenti SPC ("Solid Polymer Composite", evoluzione del sorpassato pavimento vinilico LVT), attualmente tra le soluzioni più moderne ed innovative che portano in dote una serie di vantaggi pratici, estetici e funzionali.

L'SPC di fatto, è un pavimento resiliente-vinilico-stratificato con un cuore centrale rigido che assicura notevole stabilità dimensionale ed in cui, al contrario dei classici pavimenti laminati di primo prezzo, non viene utilizzata la fibra di legno in nessuno strato evitando quindi tutti i problemi connessi alla medesima.

I migliori SPC sul mercato si compongono di 5 strati, ognuno dei quali assolve ad una differente e sostanziale funzione: in superficie due strati trasparenti che assicurano protezione dagli UV, dai graffi e dalle macchie, successivamente uno strato di vinile che può essere decorato a piacimento, al centro un cuore composto di pietra e pvc che fornisce rigidità e stabilità alla doga ed infine alla base un tappetino preincollato che garantisce isolamento acustico e comfort.

TRA I VARI "PRO" DEI PRODOTTI SPC

• Impermeabilità (ok bagno e cucina);
• Spessore ridotto. Si posa molto spesso su precedenti fondi (purché rigidi e sufficientemente planari: NO LEGNO, TAPPETI, MOQUETTE, VECCHI SPC/LVT ECC.) senza demolizioni costose ed inquinanti;
• Resistenza al calpestio;
• Supporto rigido centrale che riduce drasticamente l'instabilità dimensionale dei precedenti modelli LVT;
• Superficie confortevole al calpestio e calda al tatto;
• Compatibilità con animali domestici;
• Acusticamente isolante;
• Termostabilità;
• Installazione semplice, rapida, economica, ideale per ristrutturazioni. Per chi è dotato di buona manualità è possibile anche la posa DIY. Se richiesto, si disinstalla e si rimonta altrove con la massima semplicità;
• Design evoluto che mima i legni naturali;
• Totalmente riciclabile a fine vita;

SCRATCH RESISTANT UV COATING

22 MIL WEAR LAYER
PROTECTS THE HD FILM

HD PRINT FILM
WITH WIDE VARIATION

STONE POLYMER COMPOSITE (SPC) CORE
100% WATERPROOF CORE
I4F DROP LOCK SYSTEM

HIGH DENSITY PAD UNDERLAYMENT
ADVANCED SOUND REDUCTION
EXTRA COMFORT





smart wood. avorio

formato **18x122 cm**

cod. 2022/SMWA25



DIMENSIONE MM	SPESSORE MM	MQ/SCATOLA	PZ/SCATOLA	KG/SCATOLA	COLLI/PALLET	MQ/PALLET	KG/PALLET
181,1 x 1219	5	2,212	10	18,40	55	121,66	1050,00



smart wood. greige

formato **18x122 cm**

cod. 2022/SMWG39



DIMENSIONE MM	SPESSORE MM	MQ/SCATOLA	PZ/SCATOLA	KG/SCATOLA	COLLI/PALLET	MQ/PALLET	KG/PALLET
181,1 x 1219	5	2,212	10	18,40	55	121,66	1050,00


Be
brave

smart wood. miele

formato **18x122 cm**

cod. 2022/SMWM41



DIMENSIONE MM	SPESSORE MM	MQ/SCATOLA	PZ/SCATOLA	KG/SCATOLA	COLLI/PALLET	MQ/PALLET	KG/PALLET
181,1 x 1219	5	2,212	10	18,40	55	121,66	1050,00



smart wood. noce

formato **18x122 cm**

cod. 2022/SMWN31



DIMENSIONE MM	SPESSORE MM	MQ/SCATOLA	PZ/SCATOLA	KG/SCATOLA	COLLI/PALLET	MQ/PALLET	KG/PALLET
181,1 x 1219	5	2,212	10	18,40	55	121,66	1050,00



smart wood. sabbia

formato **18x122 cm**

cod. 2022/SMWS42



DIMENSIONE MM	SPESSORE MM	MQ/SCATOLA	PZ/SCATOLA	KG/SCATOLA	COLLI/PALLET	MQ/PALLET	KG/PALLET
181,1 x 1219	5	2,212	10	18,40	55	121,66	1050,00



smart wood. tortora

formato **18x122 cm**

cod. 2022/SMWT40



DIMENSIONE MM	SPESSORE MM	MQ/SCATOLA	PZ/SCATOLA	KG/SCATOLA	COLLI/PALLET	MQ/PALLET	KG/PALLET
181,1 x 1219	5	2,212	10	18,40	55	121,66	1050,00



jumbo wood. rovere

formato **23x153 cm**

cod. 2050/JSM66

FINITURA A REGISTRO

FINITURA ULTRA MATT

FINITURA A BISELLO
PRESSATO SU 4 LATI



DIMENSIONE MM	SPESSORE MM	MQ/SCATOLA	PZ/SCATOLA	KG/SCATOLA	COLLI/PALLET	MQ/PALLET	KG/PALLET
232 x 1532	5	2,488	7	24.9	48	119.42	1219,00


LAZY DAYS

jumbo wood. acero

formato **23x153 cm**

cod. 2050/JSM23

FINITURA A REGISTRO

FINITURA ULTRA MATT

FINITURA A BISELLO
PRESSATO SU 4 LATI



DIMENSIONE MM	SPESSORE MM	MQ/SCATOLA	PZ/SCATOLA	KG/SCATOLA	COLLI/PALLET	MQ/PALLET	KG/PALLET
232 x 1532	5	2,488	7	24.9	48	119.42	1219,00



jumbo wood. frassino

formato **23x153 cm**

cod. 2050/JSM13

FINITURA A REGISTRO

FINITURA ULTRA MATT

FINITURA A BISELLO
PRESSATO SU 4 LATI



DIMENSIONE MM	SPESSORE MM	MQ/SCATOLA	PZ/SCATOLA	KG/SCATOLA	COLLI/PALLET	MQ/PALLET	KG/PALLET
232 x 1532	5	2,488	7	24.9	48	119.42	1219,00



smart tile. **antracite**

formato **31x92 cm**

cod. 2040/SMTL46



DIMENSIONE MM	SPESSORE MM	MQ/SCATOLA	PZ/SCATOLA	KG/SCATOLA	COLLI/PALLET	MQ/PALLET	KG/PALLET
305 x 915	5	2,230	8	19,00	52	115,96	1010,00



smart tile. greige

formato **31x92 cm**

cod. 2040/SMTL39



DIMENSIONE MM	SPESSORE MM	MQ/SCATOLA	PZ/SCATOLA	KG/SCATOLA	COLLI/PALLET	MQ/PALLET	KG/PALLET
305 x 915	5	2,230	8	19,00	52	115,96	1010,00



smart tile. grigio

formato **31x92 cm**

cod. 2040/SMTL38

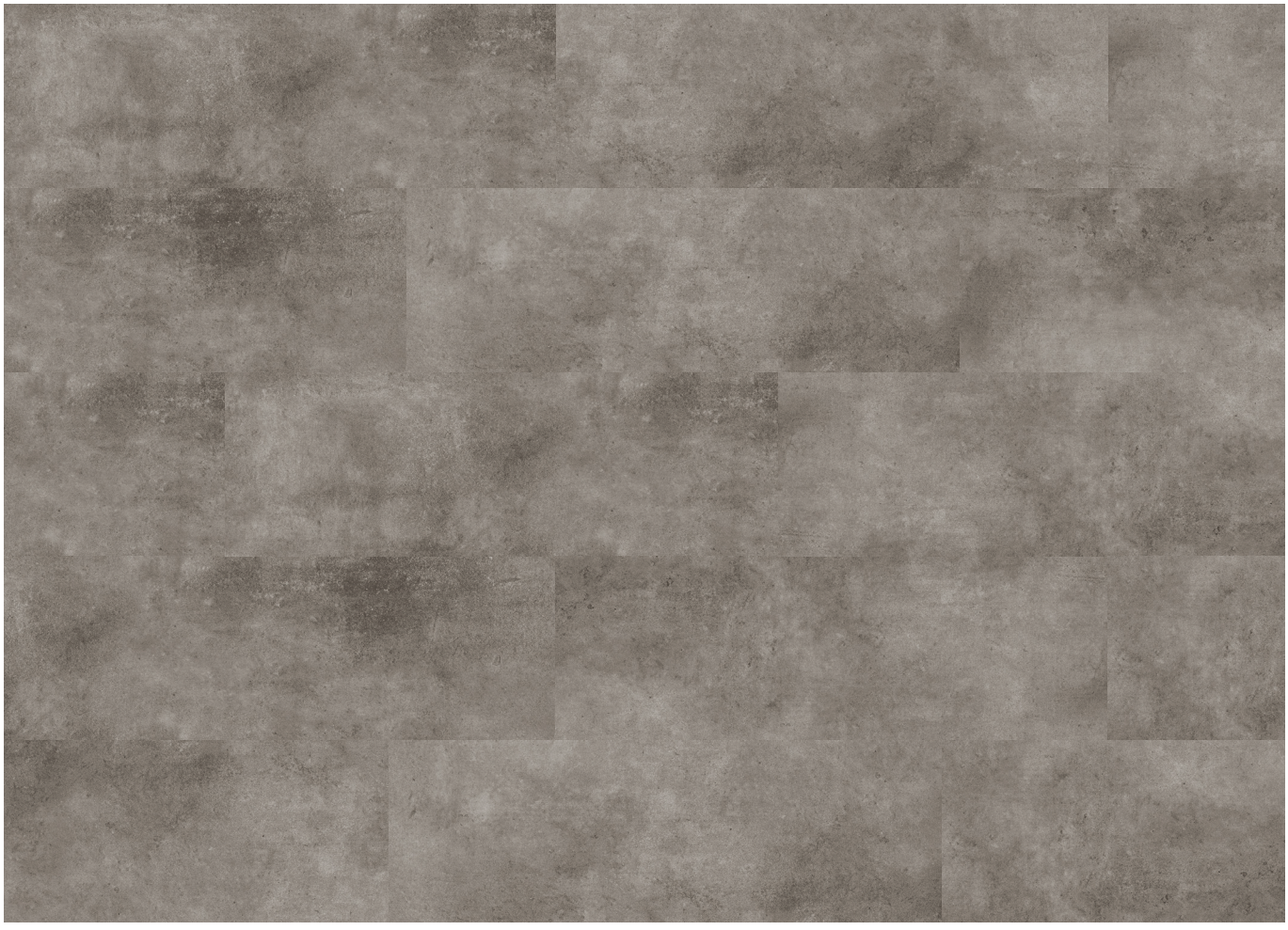

DIMENSIONE MM	SPESSORE MM	MQ/SCATOLA	PZ/SCATOLA	KG/SCATOLA	COLLI/PALLET	MQ/PALLET	KG/PALLET
305 x 915	5	2,230	8	19,00	52	115,96	1010,00

smart wood. TRIM TILES

SMARTWOOD **BATTISCOPA**
7 x 250 x 1 cm

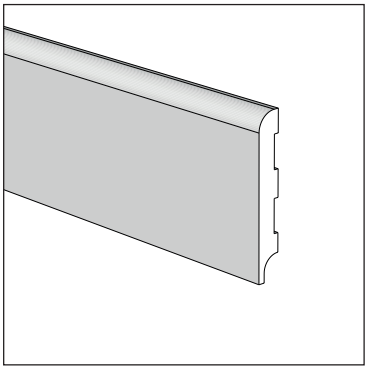

SMARTWOOD **GRADINO**
14.5 x 122 x 3.5 cm

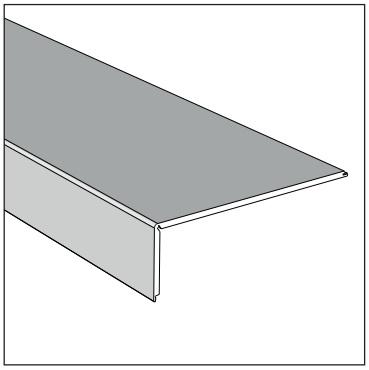

Disponibile su ordinazione
Available on request.

jumbo wood. TRIM TILES

JUMBOWOOD **BATTISCOPA**
7 x 250 x 1 cm

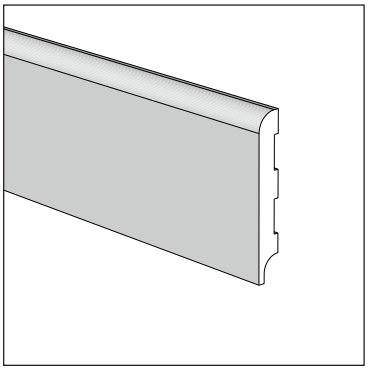

GIUNTO A **T**
270 cm

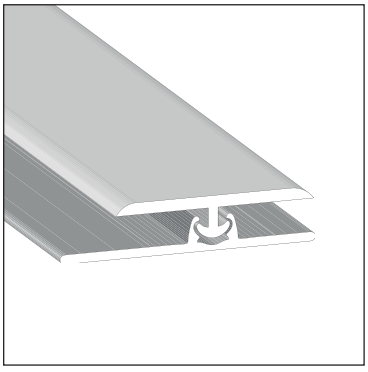

PROFILO DI RACCORDO
270 cm

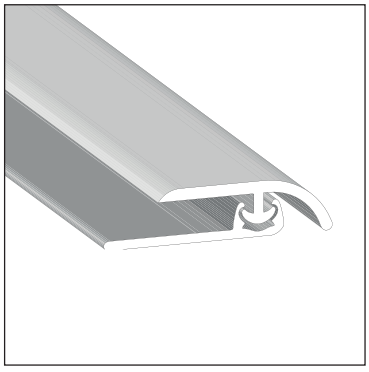

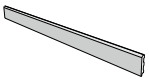

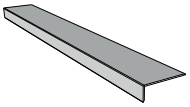

PRODOTTO	BATTISCOPA 7x250x1 cm	GRADINO 14,5x122x3,5 cm
SMART WOOD **AVORIO**	003/BSMWA25	004/GSMWA25
SMART WOOD **GREIGE**	003/BSMWG39	004/GSMWG39
SMART WOOD **MIELE**	003/BSMWM41	004/GSMWM41
SMART WOOD **NOCE**	003/BSMWN31	004/GSMWN31
SMART WOOD **SABBIA**	003/BSMWS42	004/GSMWS42
SMART WOOD **TORTORA**	003/BSMWT40	004/GSMWT40
JUMBO WOOD **ROVERE**	005/BJSMR66	-
JUMBO WOOD **ACERO**	005/BJSMA23	-
JUMBO WOOD **FRASSINO**	005/BJSMF13	-

PRODOTTO	
GIUNTO A T ALLUMINIO ARGENTO	-
PROFILO DI RACCORDO ALLUMINIO ARGENTO	-

SMART WOOD | SMART TILE

Made in Tutkey

TECHNICAL SPECIFICATIONS EN 16511

Loose-laid panels-Semi-rigid multilayer modular floor (MMF) covering panels with wear resistant top layer SPC VINYL FLOORING 4 mm +1 mm IXPE 0,55

DIMENSIONS		
THICKNESS	5.00 mm · t_{max} - t_{min} ≤ 0.50 mm	
LENGTH	1219.2 mm · l_{max} - l_{min} ≤ 0.50 mm	
WIDTH	181.1 ± 0.10 mm · w_{max} - w_{min} ≤ 0.20 mm	
DENSITY	2000 (g/cm³)	
UNDERLAYMENT	IXPE	
TOLERANCE		
SQUARENESS	EN 16511	≤ 0.20 mm
STRAIGHTNESS	EN 16511	≤ 0.30 mm / m
FLATNESS CROSSWISE	EN 16511	Concave: ≤ 0.15% · convex: ≤ 0.20%
FLATNESS LENGTHWISE	EN 16511	Concave: ≤ 0.50% · convex: ≤ 1.00%
OPENINGS BETWEEN ELEMENTS	EN 16511	Average: ≤ 0.15 mm · max: ≤ 0.20 mm
HEIGHT DIFFERENCE BETWEEN ELEMENTS	EN 16511	Average: ≤ 0.10 mm · max: ≤ 0.15 mm
EXPANSION JOINTS	EN 16511	Every 30,5 lm
TEST		
BEVELED EDGES		Yes -Micro Bevel
SURFACE TREATMENT (UV)		YES
CLICK SYSTEM		I4F DROP LOCK SYSTEM
MEASURING HEAT STABILITY OF RESILIENT FLOORING BY COLOR CHANGE	ASTM F1514	No Changes
MEASURING HEAT LIGHT OF RESILIENT FLOORING BY COLOR CHANGE	ASTM F1515	No Changes
RESISTANCE TO CHEMICALS OF RESILIENT FLOORING	ASTM F925	No Changes
USAGE CLASSIFICATION	EN 16511	Class 23 / Class 33
ASSESSMENT OF THE SURFACE RESISTANCE TO MICROSCRATCHING	EN16094 Procedure A	MSR-A1
ASSESSMENT OF THE SURFACE RESISTANCE TO MICROSCRATCHING	EN16094 Procedure B	MSR-B1
RESISTANCE TO STAINING	EN 438-2	Class 5 (No Change)
ABRASION RESISTANCE METHOD B	EN 16511	≥ 3000 cycles
IMPACT RESISTANCE	EN 16511	≥ 1800 mm
CASTOR CHAIR TEST	ISO 4918	No change in appearance after 25.000 cycles
EFFECT OF FURNITURE LEG	EN 16511	No visible damage
THICKNESS SWELLING	EN 16511	No swelling
RESIDUAL INDENTATION	EN 16511	≤ 0.01mm
DIMENSIONAL STABILITY	EN 16511	≤ 0.15 %
FLOOR HEATING SYSTEM	Yes suitable, see separate installation instructions.	Max. 27° C
LOCKING STRENGTH	EN 16511	fl0,2 ≥ 1 kN/m (length); fs0,2 ≥ 1.5 kN/m (width)
ENVIRONMENT		
EMISSION OF FORMALDEHYDE	CDPH	PASS
TVOC RANGE	TVOC	PASS (0.5 mg/m3 or less)
PHYSICAL BEHAVIOR		
FIRE BEHAVIOUR	EN 13501-1	Bfl-s1
SLIDE RESISTANCE	EN 13893	DS
THERMAL RESISTANCE	EN 12667	0.034 (m2K)/W
ELECTROSTATIC BEHAVIOUR	EN 1815	Antistatic Floor Covering
SOUND ABSORPTION QUALITIES		
CALCULATED IMPACT INSULATION CLASS	ASTM E492-09	IIC 62
CALCULATED SOUND TRANSMISSION CLASS	ASTM E90-09	STC 60 *

* STC value	WHAT CAN YOU HEAR?
25	soft speech can be heard and understood
30	normal speech can be heard and understood
35	loud speech can be heard and understood
40	loud speech can be heard but not understood
45	sound limit from which privacy begins
50	loud sounds can be heard, but they are very faint
60	good soundproofing begins at this level. neighbors are generally not disturbed by very loud speech

The data sheet is updated regularly to meet new technological standards.
This version replaces all previous versions as well as those which are undated.
SPC RIGID CORE Flooring of floating installation,
Level of use according to EN 16511: Class 33
FOR FLOORING TO BE USED IN LIVING AREAS AND COMMERCIAL PREMISES
08/2021

SMART WOOD | SMART TILE



HOW TO INSTALL

FULL DETAILS

JUMBO WOOD

Country origin: Made in PRC | Update 14.10.2024

TECHNICAL SPECIFICATIONS			
PRODUCT TYPE	PC (Rigid LVT)	**INSTALLATION**	Floating (Tight lock)
OVERALL THICKNESS	5.0mm	**BEVEL**	Pressed bevel on 4 sides
WEAR LAYER	0.5mm	**BACKING TYPE AND THICKNESS**	1mm EVA
FINISH	Anti-microbial PureCoat UV coating		

CLASS OF USE			
DOMESTIC	23	**COMMERCIAL**	33

ENVIRONMENTAL IMPACT			
LIFE CYCLE ASSESMENT	Oct 2022	**ENVIRONMENTAL PRODUCT DECLARATION**	Oct 2022 - Oct 2027

CERTIFICATIONS			
CE MARKING	Compliant	**GREENGUARD GOLD**	Compliant
UKCA MARKING	Compliant	**PRODUCT HEALTH DECLARATION**	Compliant
IAC GOLD	Compliant	**ASSURE**	Compliant

CHEMICAL PROPERTIES				
NORM	**ITEM**	**TEST METHOD**	**REQUIREMENT**	**RESULT**
EN 14041	Emissions	EN 717-1	≤0.12mg/m3	Compliant
DECRET NO.2011-321	Emissions	ISO 16000	VOC A+ (TVOC<1000μg/m3)	Compliant
CDPH	Emissions	pectrometry, chromatography	TVOC ≤220μg/m3	Compliant
CPSIA & PROP 65	Ortho-Phthalates	CPSC-CH-C-1001-09.4	N.D.	Compliant
REACH	SVHC	pectrometry, chromatography	≤0.1%	Compliant

PHYSICAL PROPERTIES				
NORM	**ITEM**	**TEST METHOD**	**REQUIREMENT**	**RESULT**
ISO 10582	Length	ISO 24342	≤0.15% of nominal length up to max 0.5mm	Compliant
	Width	ISO 24342	≤0.1% of nominal width up to max 0.5mm	Compliant
	Squareness and straightness	ISO 24342	≤0.25mm/≤400mm	Compliant
	Total thickness (with backing)	ISO 24346	+0.13mm/-0.1mm, max ±0.15mm	Compliant
	Wear layer thickness	ISO 24340	+13%, -10%	Compliant
	Dimensional stability (6hrs at 80°C)	ISO 23999	ΔW/ΔL ≤0.15%	Compliant
	Curling	ISO 23999	≤1mm	Compliant
	Castor chair	ISO 4918	Commercial 15,000R	Compliant
	Residual indentation	ISO 24343-1	≤0.1mm	Compliant
	Light fatness (blue wool)	ISO 105-B02:2014 METHOD 3A	≥Grade 6	Compliant
	Flatness	ISO 10582 APPENDIX B	Length: ≤0.50% (concave) / ≤1.0% (convex) Width: ≤0.10%(concave) / ≤0.15% (convex)	Compliant
	Openings	ISO 10582 Appendix C	Average ≤0.15mm / Max ≤0.2mm	Compliant
	Height difference	ISO 10582 Appendix C	Average ≤0.1mm / Max ≤0.15mm	Compliant
	Locking strength	ISO 10582 Appendix D	≥1.5 KN/m	Compliant

JUMBO WOOD

PHYSICAL PROPERTIES				
NORM	**ITEM**	**TEST METHOD**	**REQUIREMENT**	**RESULT**
EN 16511	Wear resistance	EN 13329 /ISO 24338 PROCEDURE A	≥4000 cycles (AC4)	Compliant
	Impact resistance	EN 13329 ANNEX F	≥1600mm	Compliant
	Martindale (gloss retention)	EN 16094	≤MSR-A2	Compliant
	Martindale (micro-scratch)	EN 16094	≤MSR-B2	Compliant
	Furniture leg	EN ISO 16581	No visible damage	Compliant
	Resistance to staining	EN 438-2	Group 1 and 2: Grade 5 Group 3: Grade 4	Compliant
	Swelling	ISO 24336	≤1mm	Compliant
EN 14041	Thermal Resistance (R)	EN 12664/ASTM C518	NA	Compliant
	Slipperiness	EN 13893	≥0.3	Compliant
	Reaction to fire	EN 13501-1	Class Bfl -s1	Compliant
OTHERS	Slipperiness	DIN 51130 /DIN EN 16165 Annex B	≥R9	Compliant
	Airborne sound transmission	ISO 10140-2	N/A	68dB*
	Impact sound transmission	ISO 10140-3	N/A	42dB*
	Impact sound transmission - Reduction	ISO 10140-1	N/A	18dB*

*Acoustic performance results are provided for reference only.

LEED SCORECARD			
CREDIT TYPE	**POINTS**	**CRITERIA**	**PRODUCT CONTRI**
LEED BD+C AND ID+C EQ CREDIT: LOW-EMITTING MATERIALS	1-3 points	Option 1. Product has been tested according to California Department of Public Health (CDPH) Standard Method v1.2–2017 and complies with the VOC limits in Table 4-1 of the method. Additionally, the range of total VOCs after 14 days (336 hours) was me sured as specified in the CDPH Standard Method v1.2 and is reported (TVOC ranges: 0.5 mg/m3 or less, between 0.5 and 5 mg/m3, or 5 mg/m3 or more).	Rigid Core products are GreenGuard Gold and/or FloorScore certified.
		Option 2. Product has been tested according to EN 16516:2017 and complies with the LCI values from Table 1 of the German AgBB Testing and Evaluation Scheme (2015) and a formaldehyde limit of 10 micrograms per cubic meter. Additionally, the range of total VOCs after 28 days was measured as specified in EN 16516 and reported (TVOC ranges: 0.5 mg/m3 or less, between 0.5 and 5 mg/m3, or 5 mg/m3 or more).	Rigid Core products are IAC Gold certiifed, including com-pliance with German AgBB testing.
MR CREDIT: BUILDING PRODUCT DISCLOSURE AND OPTIMIZATION – ENVIRONMENTAL PRODUCT DECLARATIONS	1 point	Option 1. Environmental Product Declaration (EPD) Environmental Product Declarations which conform to ISO 14025 and EN 15804 or ISO 21930 and have at least a cradle to gate scope. Product-specific Type III EPD -- Products with third-party certification (Type III), including external verification and external critical review are valued as 1.5 products for the purposes of credit achievement calculation.	SPC (Made in China) LCA - Oct 2022; SPC (Made in China) EPD - Oct 2022 - Oct 2027.
MR CREDIT: BUILDING PRODUCT DISCLOSURE AND OPTIMIZATION – MATERIAL INGREDIENTS	1 point	Option 1. Material Ingredient Reporting Health Product Declaration. The end use product has a published and complete Health Product Declaration with full disclosure of known hazards in compliance with the Health Product Declaration open Standard.	SPC (Made in China) Health Product Declaration - HealthRate Platinum (by GreenTag).
		Option 2: Material Ingredient Optimization International Alternative Compliance Path – REACH Optimization (value at 100% of cost or 1 product). End use products and materials have fully invento-ried chemical ingredients to 100 ppm and assess each substance against the Authorization List – Annex XIV, the Restriction list – Annex XVII and the SVHC candidate list, (the version in effect June 2013,) proving that no such substance is included in the product. If the pr duct contains no ingredients listed on the REACH Authorization, Restriction, and Candidate list.	products are REACH compliant.

JUMBO WOOD

WELL SCORECARD

The WELL Building Standard is founded on the understanding that facets of our environment interact with personal, genetic and behavioral factors to shape our overall health and well-being. By compiling leading practices in building design and management and referencing existing standards and best practice guidelines set by governmental and professional organizations, WELL works to harmonize and clarify existing thresholds and requirements.

FACET	FEATURE	PART	REQUIREMENTS	CONCEPT SCORE	HOW OUR PRODUCT CONTRIBUTE TO OBTAIN WELL LEVEL CERTIFICATION
AIR	01. Air quality standards	1. Standards For Volatile Substances	The following conditions are met: a. Formaldehyde levels less than 27ppb (0.027ppm)	PRECONDITION	a. Formaldehyde emission are less than 0.05mg/m3.
			b. Total volatile organic compounds less than 500ug/m3 (0.5mg/m3)		b. The total volatile organic compounds are less than 0.5mg/m3.
	04. VOC Reduction	1. Interior Paints and Coatings	The VOC limits of newly applied paints and coating meet one of the following requirements: a. 100% of installed products meet California Air Resources Board (CARB) 2007, Suggested Control Measure (SCM) for Architectural Coatings, or South Coast Air Quality Management District (SCAQMD) Rule 1113, effective June 3, 2011 for VOC content.	PRECONDITION	a. The VOC limits for California Air Resources Board (CARB) are less than 0.11ppm. b. Measured Concentration of Total Volatile Organic Compounds (TVOC): Less than/equal to 0.5 mg/m3 (in compliance with CDPH/EHLB Standard Method v1.1- 2010). The product is GreenGuard Gold certified
			b. At minimum 90%, by volume, meet the California Department of Public Health (CDPH) Standard Method v1.1-2010 for VOC emissions		products are REACH compliant.
		3. Flooring	The VOC emissions of all newly installed flooring must meet all limits set by the following, as applicable: a. California Department of Public Health (CDPH) Standard Method v1.1-2010.	PRECONDITION	Conforms to the CDPH/EHLB Standard Method v1.1-2010 (California Section 01350), effective January 1, 2012, for the school classroom and private office parameters when modeled as Flooring. The product is GreenGuard Gold certified
	11. Fundamental Material Safety	1. Asbestos and Lead Restriction	All newly-installed building materials meet the following materials composition requirements: a. No asbestos. b. Not more than 100 ppm (by weight) added lead.	PRECONDITION	a. No asbestos b. The product contain less than 100 ppm.
		2. Lead Abatement	For repair, renovation or painting on buildings constructed prior to any applicable laws banning or restricting lead paint, lead evaluation and abatement.	PRECONDITION	The product contain less than 90 ppm.
		3. Asbestos Abatement	To reduce hazards in buildings constructed prior to any applicable laws banning or restricting asbestos, the following testing, evaluation and abatement.	PRECONDITION	The product contain less than 90 ppm
	25. Toxic Material Reduction	2. Flame Retardant Limitation	Halogenated flame retardants are limited in the following components to 0.01% (100 ppm) to the extent allowable by local code: a. Window and waterproofing membranes, door and window frames and siding. b. Flooring, ceiling tiles and wall coverings. c. Piping and electrical cables, conduits and junction boxes. d. Sound and thermal insulation. e. Upholstered furniture and furnishings, textiles and fabrics.	OPTIMIZATION	The product don't contain halogenated flame retardants
		3. Phthalate (Plasticizers) Limitation	DEHP, DBP, BBP, DINP, DIDP or DNOP (often found in polyvinyl chloride [PVC]) are limited in the following components to 0.01% (100 ppm): a. Flooring, including resilient and hard surface flooring and carpet. b. Wall coverings, window blinds and shades, shower curtains, furniture and upholstery. c. Plumbing pipes and moisture barriers.	OPTIMIZATION	In accordance with US Consumer Product Safety Improvement Act 2008 (CPSIA) (H.R.4040) Title I, Section 108 & California Proposition 65 & Annex XV II item 51&52 of the REACH Regulation (EC) No. 1907/2006 and amendment No. 552/2009, the product contains less than 100ppm.
		5. Urea-Formaldehyde Restriction	Urea-formaldehyde presence is limited in the following components to 100 ppm: a. Furniture or any composite wood products. b. Laminating adhesives and resins. c. Thermal insulation.	OPTIMIZATION	The product contains urea-formaldehyde less than 100ppm.
COMFORT	74. Exterior Noise Intrusion	Part 1. Sound Pressure Level	Each regularly occupied space meets the following sound pressure level as mesured when the space and adjacent spaces are unoccupied, but within 1 hour of normal business hours: a. Average sound pressure level from outside noise intrusion does not exceed 50 dBA.	PRECONDITION	1. The product has Lnw = 42dB according to the standard ISO 10140-3 2. The product has Rw = 68dB according to the standard ISO 10140-2
	79. Internally Generated Noise	Part 1. Sound Masking Limits	If sound masking systems are used, sound levels fall within the following range, when measured from the nearest workspace: a. Open workspaces: 45 - 48 dBA. b. Enclosed offices: 40 - 42 dBA	OPTIMIZATION	1. The product has Lnw = 42dB according to the standard ISO 10140-3 2. The product has Rw = 68dB according to the standard ISO 10140-2

JUMBO WOOD



Resistente all'acqua



Superficie extra resistente agli urti



Manutenzione facile



Installazione senza colla



Superficie antimicrobica



Perfetto per tutti i tipi di ambiente

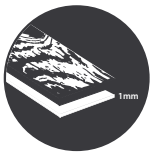

Pannello fonoassorbente



Finitura a bisello pressato su 4 lati



Sistema di chiusura angolo stretto



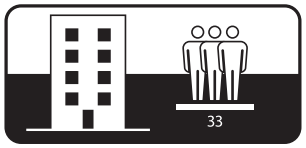

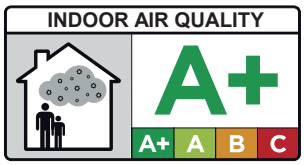

*** Information on the level of volatile compounds emissions into indoor air, which presents a risk of toxicity from inhalation, on a scale from A+ (very low emissions) to C (high emissions)**

GUIDA ALL'INSTALLAZIONE

BOXER srl
Via Ferrari Carazzoli, 84 41042 FIORANO MODENESE (MO)
Tel +39 0536 929811 Tel Clienti Italia +39 0536 929850
info@boxer.it www.boxer.it